Circuit Diagram:

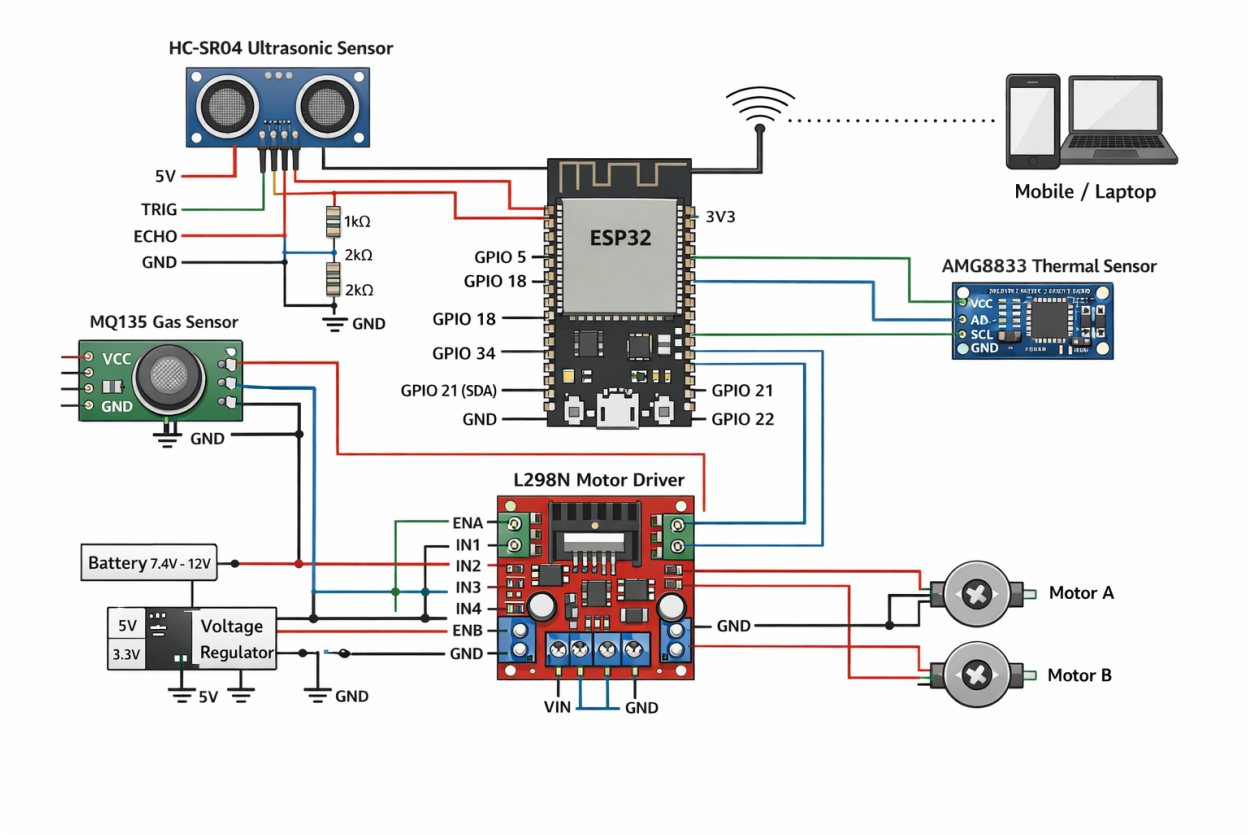

Figure 1 Circuit Diagram

Specifications:

Component	Model	Key Specifications	Purpose
Microcontroller	ESP32 Wroom	240 MHz dual-core processor, WiFi & Bluetooth, 3.3V logic, multiple GPIO	Main controller for sensor processing, communication, and motor control
Ultrasonic Sensor	HC-SR04	Operating voltage: 5V, Range: 2 cm – 400 cm, Accuracy: ±3 mm	Obstacle detection and distance measurement

Gas Sensor	MQ135	Voltage: 5V, Detects NH3, NOx, alcohol, benzene, CO_2	Air quality and harmful gas detection
Thermal Sensor	AMG8833 (Grid-Eye)	Voltage: 3.3V, 8×8 thermal array, Temperature range: 0–80°C, I2C interface	Detects heat signatures for surveillance
Motor Driver	L298N Dual H-Bridge	Motor voltage: up to 46V, Current: 2A per channel	Controls direction and speed of DC motors
DC Motors	Geared DC Motor	Voltage: 6–12V, Speed: ~100–300 RPM	Provides locomotion to the robot
Power Supply	Li-ion Battery Pack	7.4V–12V output	Powers motors and electronics
Voltage Regulator	Buck Converter	Input: up to 40V, Output: adjustable 3.3V / 5V	Provides stable voltage to sensors and ESP32
Communication Interface	WiFi (built-in ESP32)	IEEE 802.11 b/g/n	Enables remote monitoring and control from mobile/laptop